# 1860016
# Emily Bedside Table- Antique White
## Parts and Hardware List

| | | |
|---|---|---|
| A. | Table Assembly | 1 pc |
| B. | Feet | 4 pcs |
| C | Angle Brace | 1 pc |
| D | Screw | 1 pc |
| E. | Phillips Head Screwdriver | 1 pc |
| F. | Shelf Supports | 4 pcs |
| G. | Adjustable Shelf | 1 pc |

∗ Please make sure that you have all the parts and hardware indicated above before you begin assembly of this item.
∗ Use the hardware illustrations to determine correct piece and size.
∗ This item should be assembled on a soft surface to prevent scratching the finish during assembly.
∗ This item may require periodic tightening.

## Hardware Illustrations

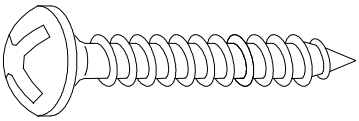

D. Screw

# 1860016
# Emily Bedside Table- Antique White

## Attach the Feet

**Parts required**

| | | | | | |
|---|---|---|---|---|---|
| A. | Table Assembly | 1 pc | B. | Feet | 4 pcs |

1. Place the Table Assembly (A) up side down on a soft surface.
2. **Attach Legs (B)** Insert the exposed threads of the Feet (B) into the pre-threaded holes in each corner of the Top Assembly (A). Secure by turning in a clockwise direction. See Illustration#1
   Note: Do not over tighten the Feet (B).

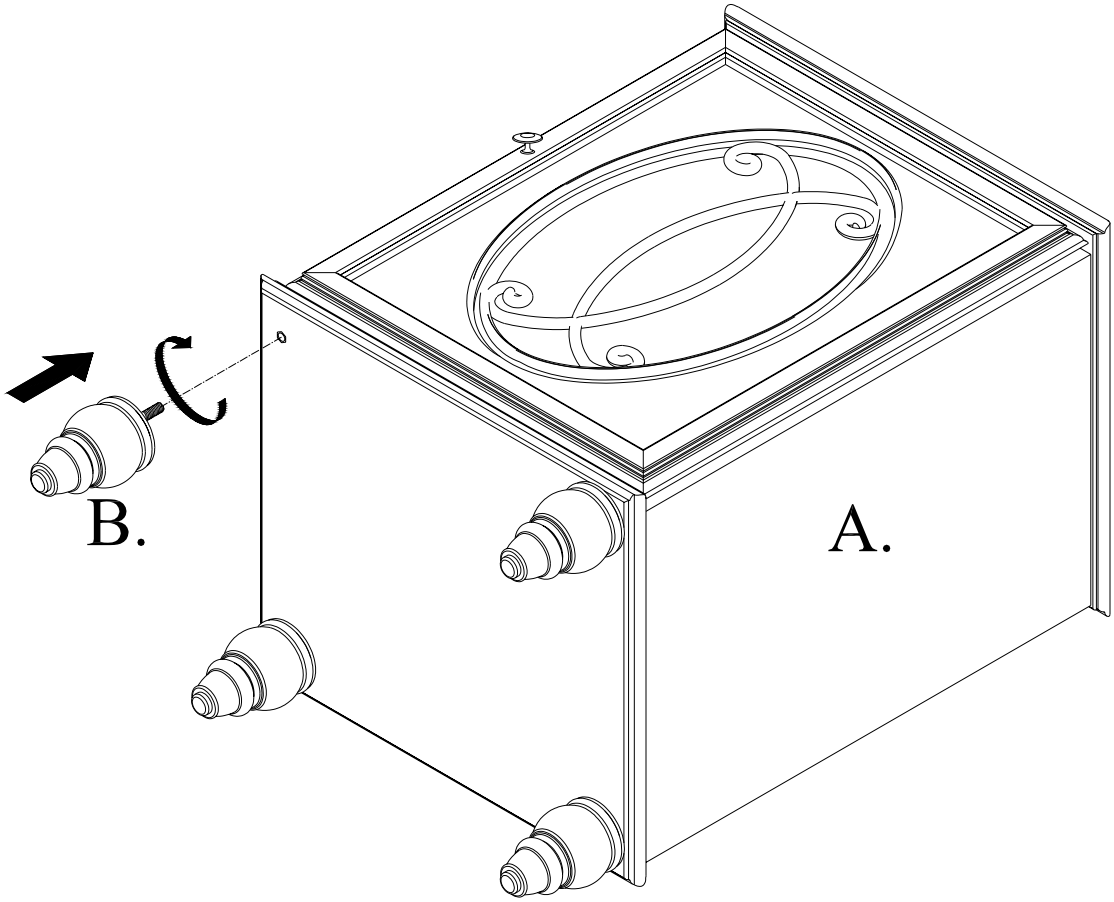


**Illustration#1**

# 1860016
# Emily Bedside Table- Antique White

## Attach the Adjustable Shelf &Angle Brace

**Parts required**

| | | | | | |
|---|---|---|---|---|---|
| F. | Shelf Supports | 4 pcs | G. | Adjustable Shelf | 1 pc |
| C. | Angle Brace | 1 pc | D. | Screw | 1 pc |
| E. | Phillips Head Screwdriver | 1 pc | | | |

3. **Attach the Adjustable Shelf (G).** Insert the Shelf Supports (F) into the desired pre-drilled holes in Table Assembly (A). Place the Adjustable Shelf (G) over the Shelf Supports (F). See illustration #2.
4. **Attach Angle Brace (C) to wall** Place the table in the desired location against the wall. Take the top drawer out. Mark the location for the Angle Brace (C) through the cut-outs in the back panel. Move the table aside. Attach the Angle Brace (C) to the wall. See note below for attachment hardware.
5. **Attach Angle Brace (C) to Table** Carefully align the cut-outs in the back panel over the Angle Braces (C). Secure in place with the Screw (D), using the Phillips Head Screwdriver (E). Insert the drawers into the table. See illustration#2.

Note:

**Hanging Devices**

Hanging hardware will be needed to secure this item to the wall in your home. Due to the many different types of materials used in home construction you will need to choose an appropriate wall fastener to ensure this item is securely hung. Please consult your local hardware specialist in selecting appropriate hardware and determining proper installation procedures based on your particular needs.

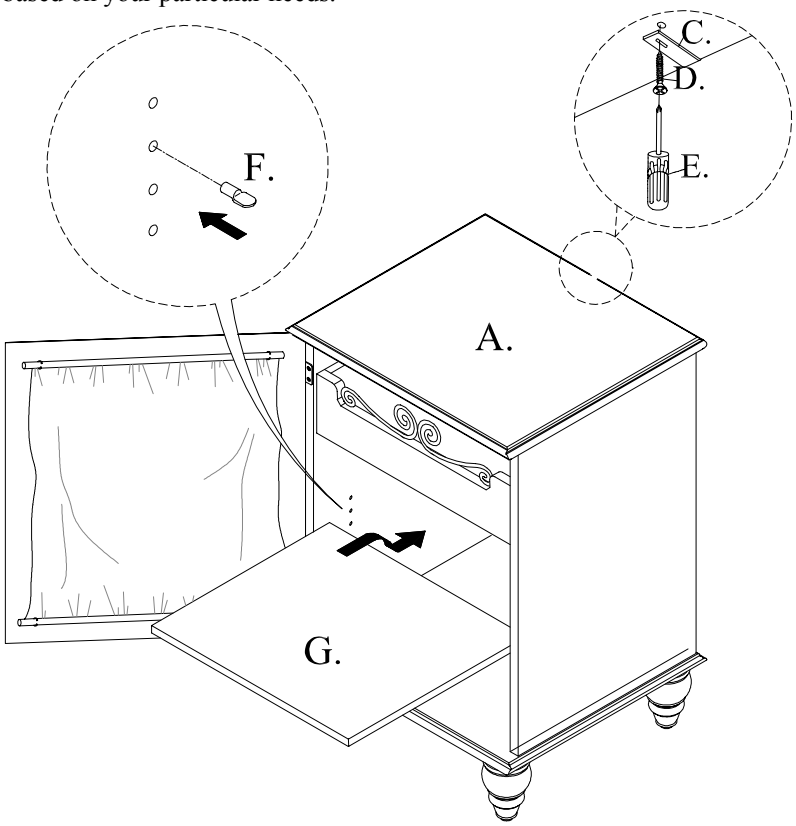


**Illustration#2**